# Hanging Tray Bird Feeder

An open tray feeder that hangs from a cord. For tits, sparrows, finches, robins and other small birds.

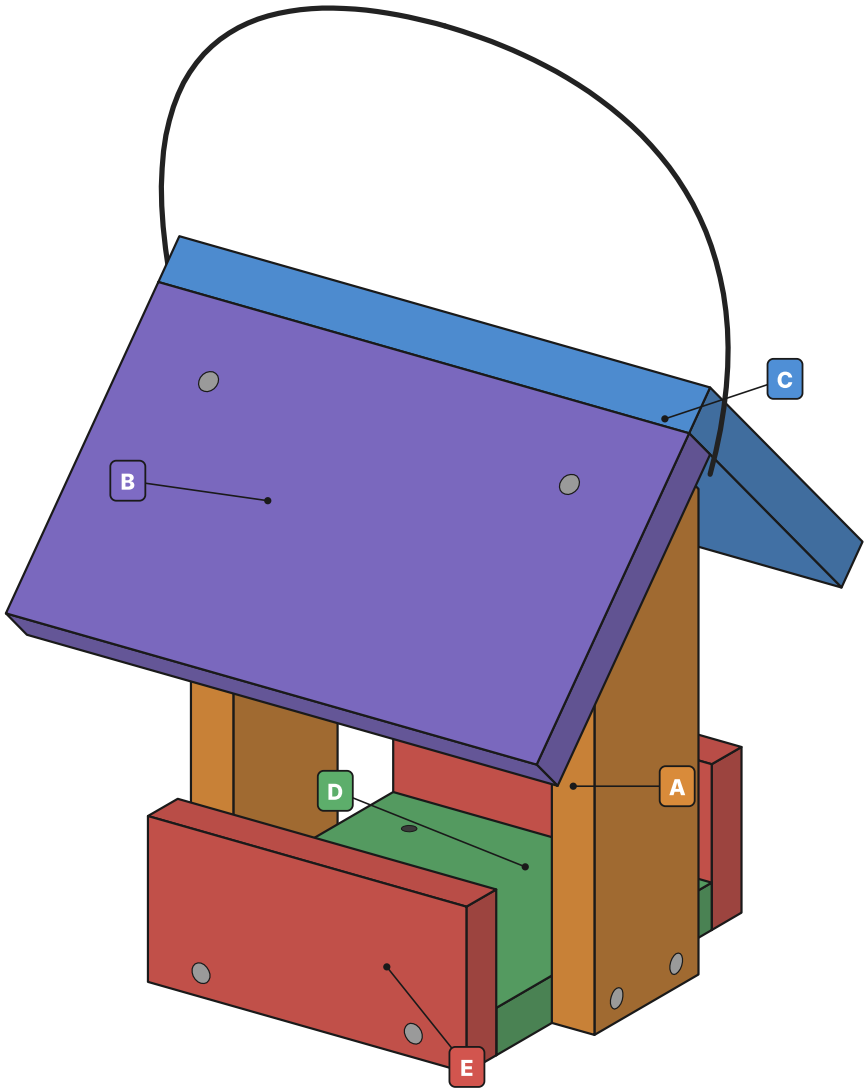


| | | | |
|---|---|---|---|
| **Skill** | First project | **Time** | About 2 hours |
| **Finished size** | 250 mm wide · 219 mm deep · 268 mm high | **Wood** | Larch, Douglas fir or untreated spruce, 2 boards |
| **Feeding tray** | 150 mm x 145 mm inside, lip 50 mm high | **Cost** | About 15 to 25 EUR |
| **Bird safe** | 5 drain holes, no finish inside the tray, open tray that is easy to scrape clean, roof keeps seed dry | | |

## HOW TO READ THIS PLAN

A Part letter. The same letter on the parts page, the cut list and every step.

⊙ A new screw, driven in this step. Grey dots are screws from earlier steps.

✓ Check point. Fix it now, before you go on.

Grey parts are already fixed. The coloured part is new in that step.

! Read before you cut or drill.

150 mm All sizes in millimetres.



© 2026 World wood shop · WOODSHOPPLANS.ETSY.COM · WOODSHOPKIDS.ETSY.COM · For personal use. Do not resell or share this plan.

## Parts



**A End post** · 2x
240 x 70 x 20 mm · 20 x 70
grain along the 240 mm

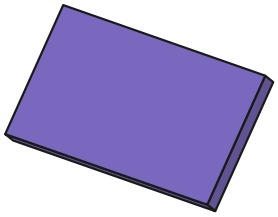

**B Roof, front** · 1x
250 x 145 x 20 mm · 20 x 145
grain along the 250 mm

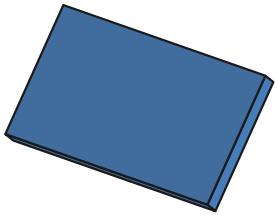

**C Roof, back** · 1x
250 x 145 x 20 mm · 20 x 145
grain along the 250 mm

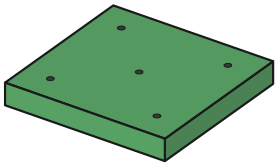

**D Tray floor** · 1x
150 x 145 x 20 mm · 20 x 145
grain along the 150 mm

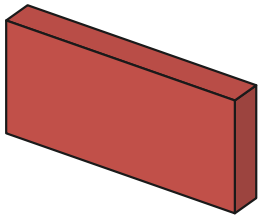

**E Tray lip** · 2x
150 x 70 x 20 mm · 20 x 70
grain along the 150 mm

## Hardware

**14x** exterior screw 4 x 50 mm, coated or stainless.
Drawn at full size: lay your screw on the drawing to check it.



**1x** outdoor cord, 1.8 m long

**1x** exterior wood glue

## Screw count by step

| Step | 3 | 4 | 5 | 6 | 7 | 8 | Total |
|---|---|---|---|---|---|---|---|
| Screws | 2 | 2 | 2 | 2 | 2 | 4 | **14** |



© 2026 World wood shop · WOODSHOPPLANS.ETSY.COM · WOODSHOPKIDS.ETSY.COM · For personal use. Do not resell or share this plan.

## Shopping list

| | |
|---|---|
| **Timber** | 1x planed board 20 x 70 mm, at least 850 mm long<br>1x planed board 20 x 145 mm, at least 700 mm long<br>Larch or Douglas fir lasts longest outdoors. Never pressure treated (green or brown impregnated) wood. |
| **Fixings** | 1x box of exterior screws 4 x 50 mm, stainless (A2) or coated (you need 14) |
| **Paint and glue** | 1x bottle of exterior wood glue, class D3 or D4<br>Optional: water based exterior wood oil or stain, outside of the roof only |
| **Rope** | 1x outdoor polyester or nylon cord, 4 to 6 mm thick, at least 1.8 m |

## Tools

Mitre saw (or handsaw and mitre box) · Drill/driver · 3 mm and 6 mm drill bits · Countersink bit · Tape measure · Pencil · Square · Clamp · Sandpaper P120 · Safety glasses

## Cut list

| | Part | Qty | Board | Length x width x thickness | Note |
|---|---|---|---|---|---|
| A | End post | 2 | 20 x 70 | 240 x 70 x 20 mm | point, then tip cut flat |
| B | Roof, front | 1 | 20 x 145 | 250 x 145 x 20 mm | |
| C | Roof, back | 1 | 20 x 145 | 250 x 145 x 20 mm | |
| D | Tray floor | 1 | 20 x 145 | 150 x 145 x 20 mm | 5 drain holes |
| E | Tray lip | 2 | 20 x 70 | 150 x 70 x 20 mm | |

## Cutting diagram

Drawn to scale, length and width. Cut the parts in this order from one end of each board. 3 mm is allowed for each saw cut. Grain runs along every part.

**Board 1: planed board 20 x 70 mm, at least 850 mm long**

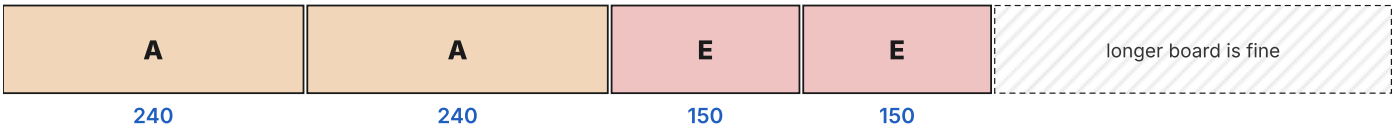


**Board 2: planed board 20 x 145 mm, at least 700 mm long**

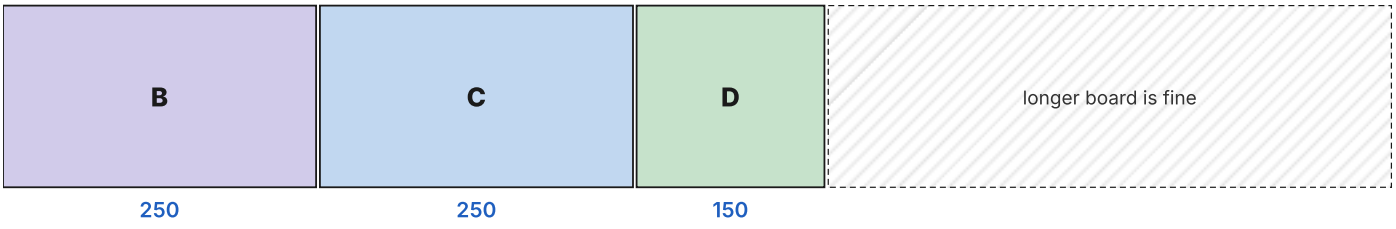


Cut the point on each post **while it is still on the long board** (step 1). Then cut the post off to length. Short pieces close to a saw blade are dangerous.



© 2026 World wood shop · WOODSHOPPLANS.ETSY.COM · WOODSHOPKIDS.ETSY.COM · For personal use. Do not resell or share this plan.

## Dimensions

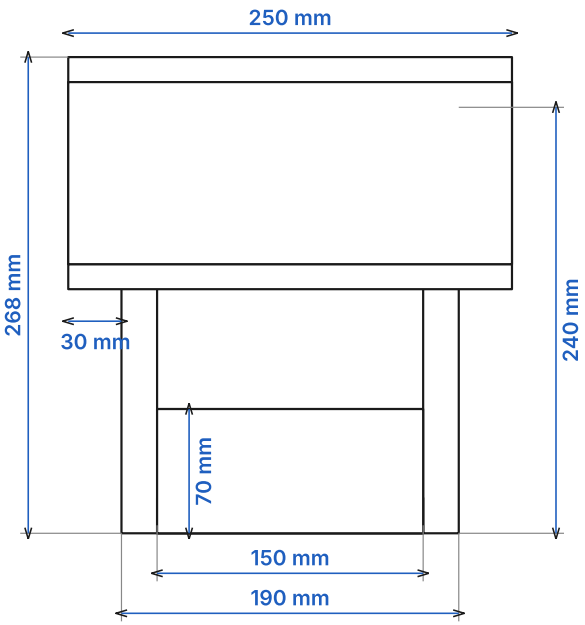


**Front**

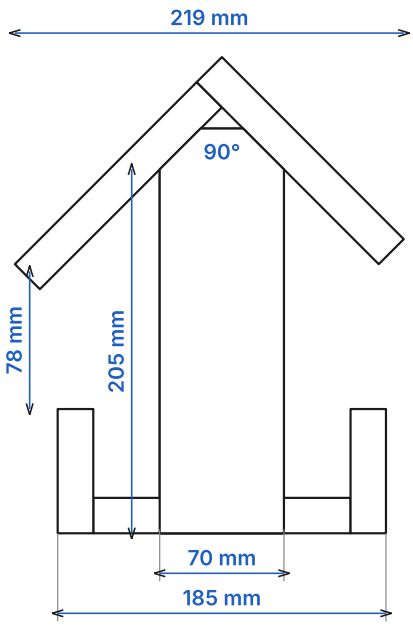


**Side (end view)**

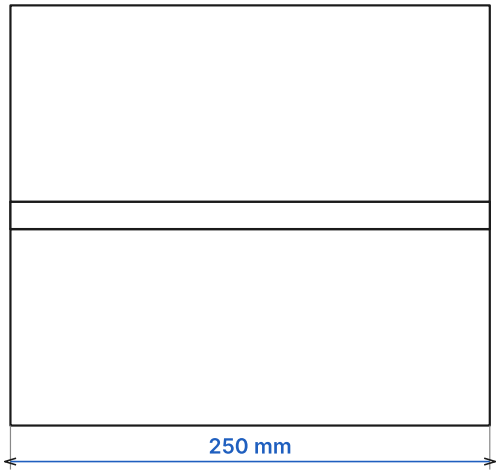


**Top**

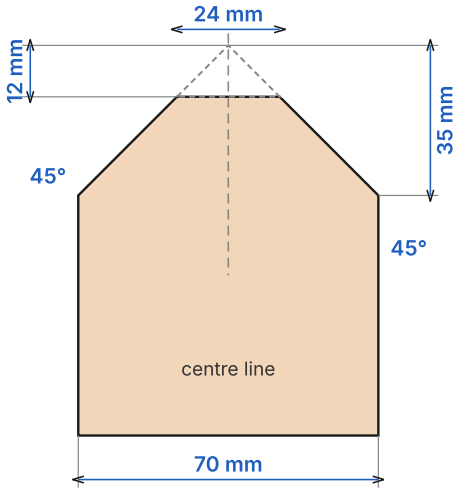


**Post top, part A (both posts)**

Roof boards meet at 90 degrees. The back roof C runs 20 mm past the ridge and covers the top edge of the front roof B, so the back eave sits a little higher than the front. That is normal.



© 2026 World wood shop · WOODSHOPPLANS.ETSY.COM · WOODSHOPKIDS.ETSY.COM · For personal use. Do not resell or share this plan.

Safety glasses on. Set the mitre saw to 45°. Cut the point on the end of the long 20 x 70 board, never on a short loose piece.

# 1 Cut the parts

A End post · E Tray lip · B Roof · D Floor

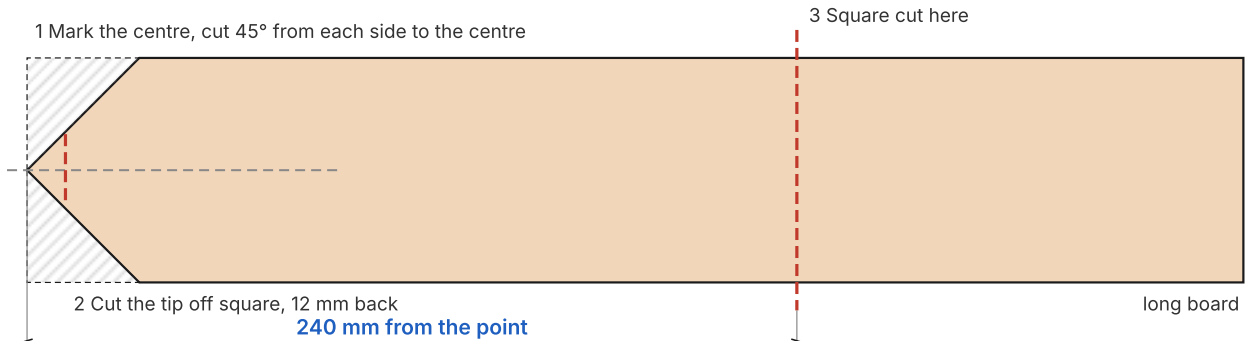


Posts A: cut the point first and measure 240 mm from the point. Then cut the tip off square, 12 mm back, so the cord has room under the ridge. Then cut the post off. Do it twice. Then cut the 2 lips E from the same board, and B, C and D from the wide board, as in the cutting diagram on page 3. Write the letter on each part in pencil.

Clamp each part to the bench with a scrap board under it before you drill, so the drill does not splinter the back.

# 2 Drill the drain holes

D Floor

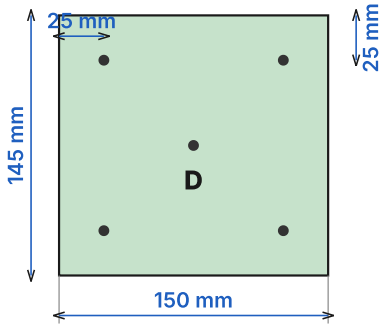


Floor D: 5 drain holes, 6 mm, so rain runs out and seed does not rot.



© 2026 World wood shop · WOODSHOPPLANS.ETSY.COM · WOODSHOPKIDS.ETSY.COM · For personal use. Do not resell or share this plan.

# 3 Fix the left post to the floor

A End post | D Tray floor | **2x screw 4 x 50 mm**

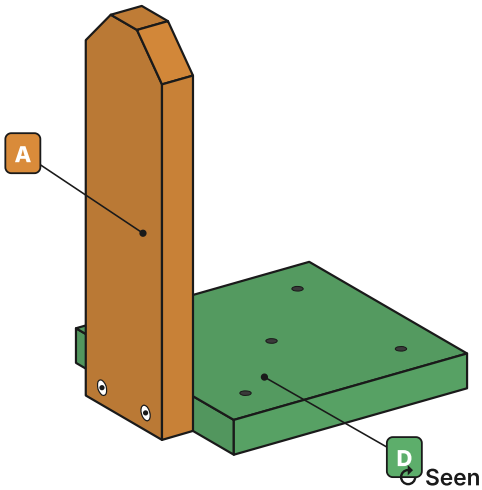


Seen from the left end, so you can see the screws.

Stand A and D on a flat table so their bottoms are flush. Centre D on the post: it sticks out 38 mm at the front and the back. Glue the joint. Drill 2 pilot holes 3 mm through A, 20 mm each side of the centre and 10 mm up from the bottom. Drive 2 screws.

# 4 Fix the right post to the floor

A End post | **2x screw 4 x 50 mm**

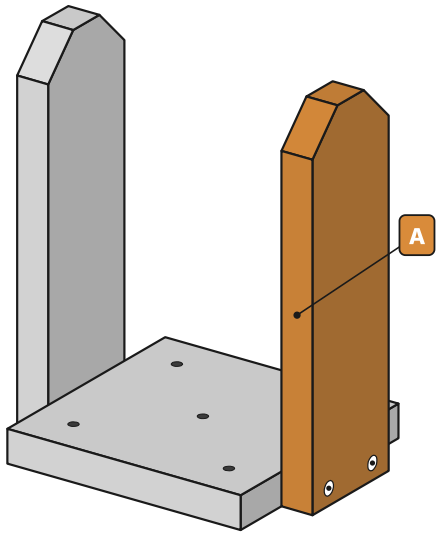


Same as step 3, on the other end of D.

Check: both posts stand straight up, and both flat tops are the same height. Loosen a screw and fix it now if not.



© 2026 World wood shop · WOODSHOPPLANS.ETSY.COM · WOODSHOPKIDS.ETSY.COM · For personal use. Do not resell or share this plan.

# 5 Fix the front lip

E Tray lip | 2x screw 4 x 50 mm

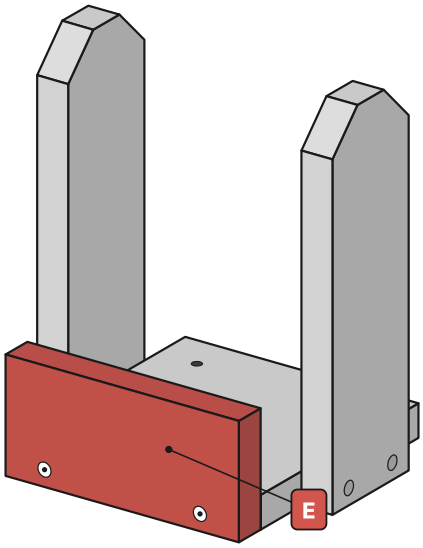


Lip E fits between the posts, flush with the bottom of the floor. Glue the edge of D. Drill 2 pilot holes 3 mm through E, 25 mm in from each end and 10 mm up from the bottom (the middle of the floor). Drive 2 screws.

# 6 Fix the back lip

E Tray lip | 2x screw 4 x 50 mm

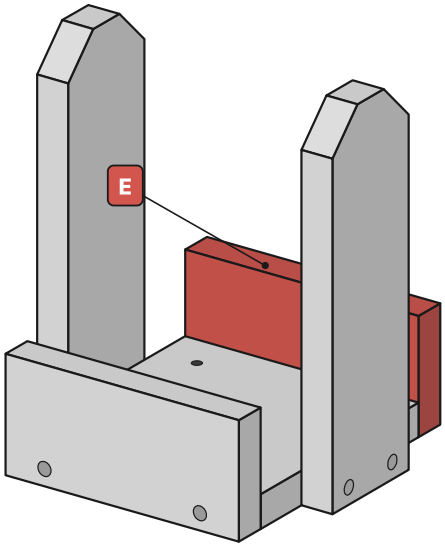


Same as step 5, on the back edge of D.



© 2026 World wood shop · WOODSHOPPLANS.ETSY.COM · WOODSHOPKIDS.ETSY.COM · For personal use. Do not resell or share this plan.

# 7 Fit the front roof

B Roof, front | **2x screw 4 x 50 mm**

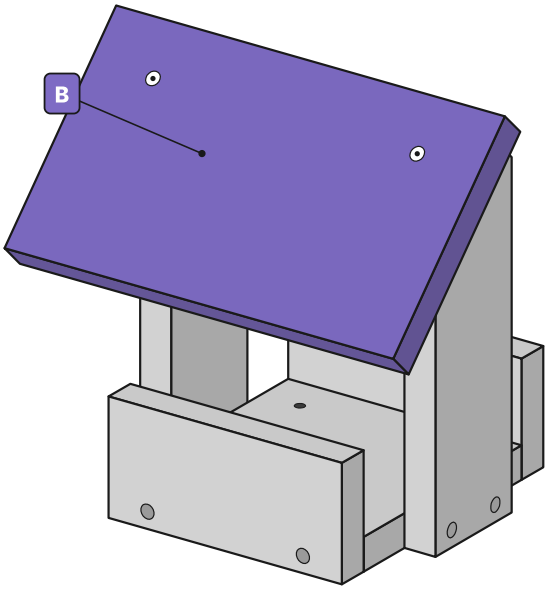


Hold an offcut of the wide board flat on the back slopes of both posts as a stop. Lay B on the front slopes and slide it up until its top edge touches the offcut. It sticks up 17 mm past the flat tops. Centre B with 30 mm past each post. Draw a line across B over the centre of each post. Glue the slopes. Drill 1 pilot hole 3 mm on each line, 33 mm down from the top edge, and drive 1 screw into each post.

# 8 Fit the back roof

C Roof, back | **4x screw 4 x 50 mm**

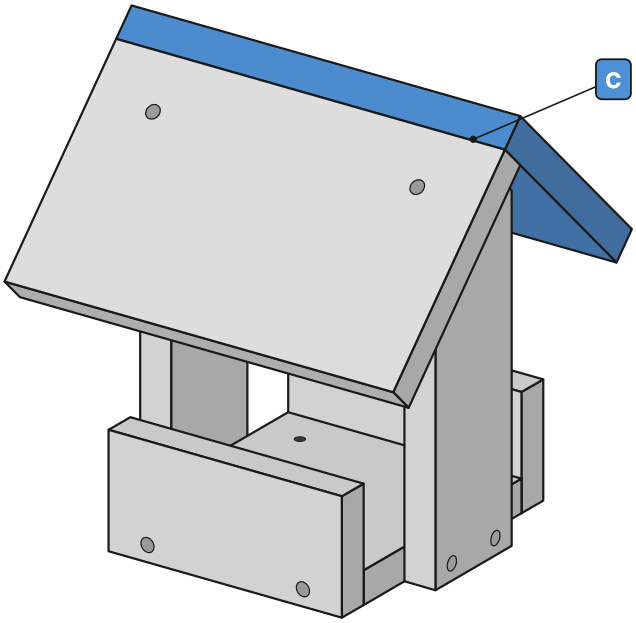


Remove the offcut. C rests on the posts and covers the top edge of B: its face is flush with the top face of B. Ends flush with B. 1 screw into each post, 53 mm down from the top edge. 2 screws through C into the edge of B, 10 mm from the top edge and 85 mm in from each end.



© 2026 World wood shop · WOODSHOPPLANS.ETSY.COM · WOODSHOPKIDS.ETSY.COM · For personal use. Do not resell or share this plan.

# 9 Thread the hanging cord

1x cord 1.8 m

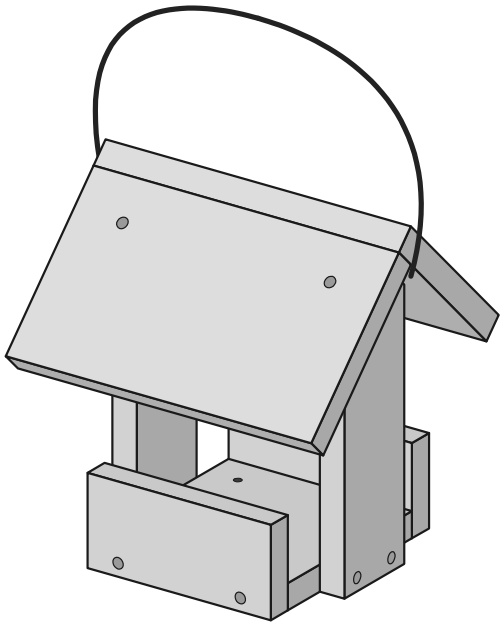

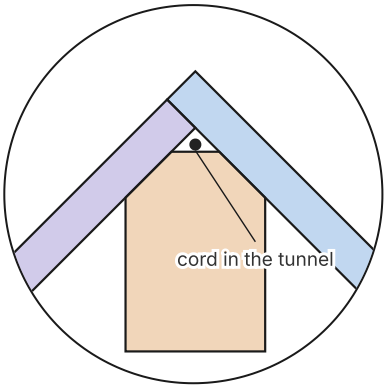


Gable end, close up

Look in at one gable end: there is a small tunnel under the ridge, above the flat post top. Push the cord through the tunnel until it comes out at the other end. Bring both ends up over the roof and tie them together 200 mm above the ridge with a double knot. The cord cannot slip out of the tunnel.

# 10 Check before you hang it

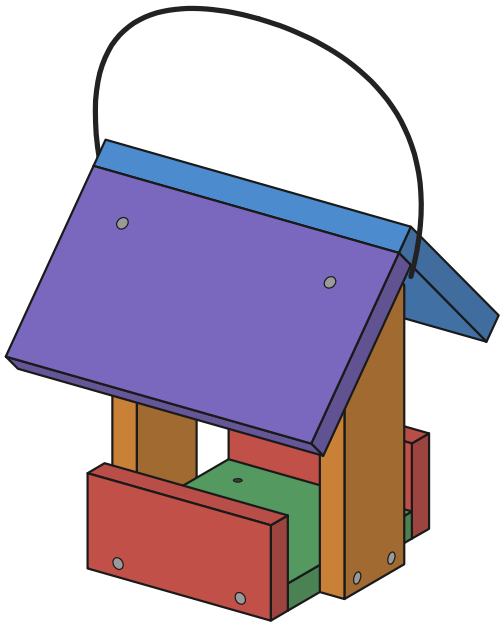

Lift it by the cord and give it a firm shake: nothing moves. It hangs level. No screw tip pokes out anywhere. Sand all edges smooth so birds and hands do not catch a splinter.



© 2026 World wood shop · WOODSHOPPLANS.ETSY.COM · WOODSHOPKIDS.ETSY.COM · For personal use. Do not resell or share this plan.

## Finish

Larch and Douglas fir can stay bare and turn silver grey. If you want colour, use a water based exterior stain or oil **on the outside of the roof only**. Never put finish inside the tray or on the lips where birds stand and seed lies. Never use pressure treated wood.

## Hang

| | |
|---|---|
| **Where** | From a branch, a hook or a bracket, about 1.5 m high, in a quiet spot you can see from the house. |
| **Windows** | Hang it less than 1 m or more than 10 m from a window. Birds then do not fly into the glass at speed. |
| **Cats** | Keep it away from bushes and fences where a cat can hide or jump from. |
| **Squirrels** | Optional: a baffle on the cord above the roof. |

## Feed and clean

| | |
|---|---|
| **Fill** | Only as much seed as birds eat in a day or two. Black oil sunflower seed suits most small birds. |
| **Every 2 weeks** | Scrape out old seed and droppings. Scrub the tray with hot water and a brush, rinse, and let it dry in the sun before you refill. Check that the drain holes are open. |
| **Wet or mouldy seed** | Throw it away at once. Wet seed makes birds sick. |
| **Once a year** | Check the cord and the roof screws. Replace a worn cord. |

## What you made

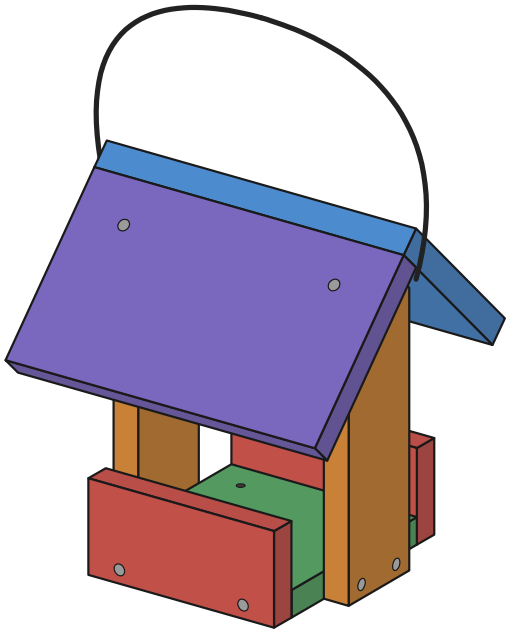



© 2026 World wood shop · WOODSHOPPLANS.ETSY.COM · WOODSHOPKIDS.ETSY.COM · For personal use. Do not resell or share this plan.